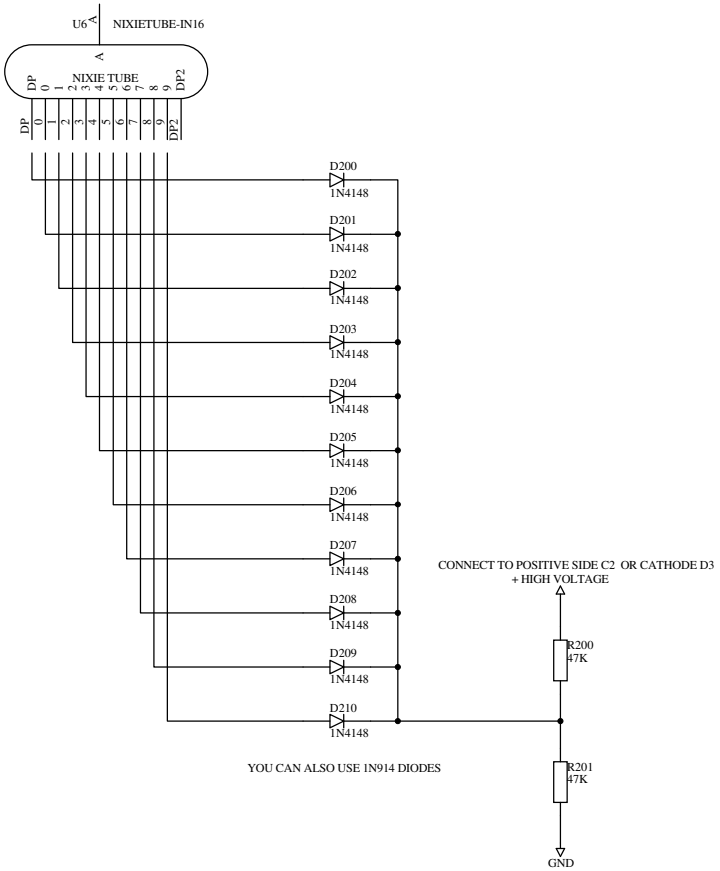

Title *Anti Ghosting Circuit*		FRANK TECHNIEK KITS + PROJECTS + SUPPORT
Revision: 1.0	WWW.FRANKTECHNIEK.NL	
Date: 22-Jun-2005 Time: 20:38:33	Sheet 1 of 1	
File: C:\Mijn documenten\Boards\NixieIN16-6-Rev1\NixieIN16-6-Rev1.ddb - Documents\AntiGhost.Sch		